INSTRUMENT LOOP DIAGRAM

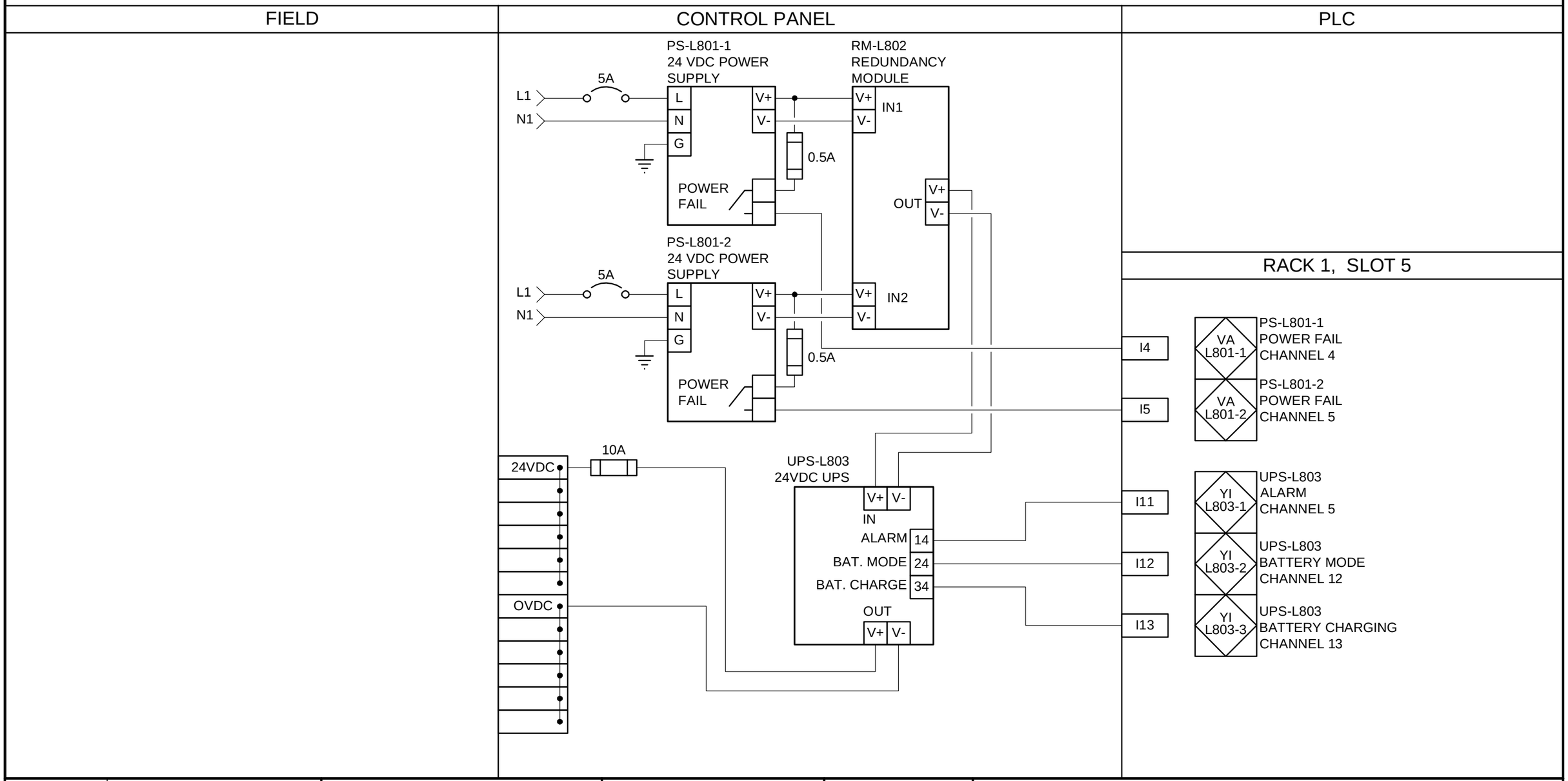

PRELIMINARY ONLY
NOT FOR CONSTRUCTION

APEGM
Certificate of Authorization
Dillon Consulting Limited (MB)
No. 1789 Date: _____

B.M.
ELEV.

CONSTRUCTION COMPLETION DATE: YYYY MM DD

NO.	REVISIONS	DATE	BY
0	ISSUED FOR ADDENDUM 3	2019-09-30	B.L.M.

DRAWING NUMBER | REFERENCE DRAWINGS

DILLON CONSULTING

DESIGNED BY	CAL	CHECKED BY	BLM
DRAWN BY	SCK	APPROVED BY	BLM
SCALE: HORIZONTAL VERTICAL	NTS	RELEASED FOR CONSTRUCTION	
DATE	2019 09 30	DATE	

PLOT DATE: 2019 09 30

ENGINEER'S SEAL

CONSULTANT PROJECT NUMBER
199259

Winnipeg

THE CITY OF WINNIPEG
WATER AND WASTE DEPARTMENT
ENGINEERING DIVISION

JESSIE WASTEWATER PUMPING STATION UPGRADES

24 VDC POWER SUPPLY

SHEET 03 OF 10

CONSULTANT DRAWING NUMBER
L-03

CITY DRAWING NUMBER
1-0149L-E0011-001

BID OPPORTUNITY:
CONTRACT NUMBER: X

FILE PATH: C:\projectwise\working directory\projects 2019\40skk\dms19203\
FILE NAME: 199259-SCHEM-02.dwg